SAGE POINT

Building 810

LEVEL 1

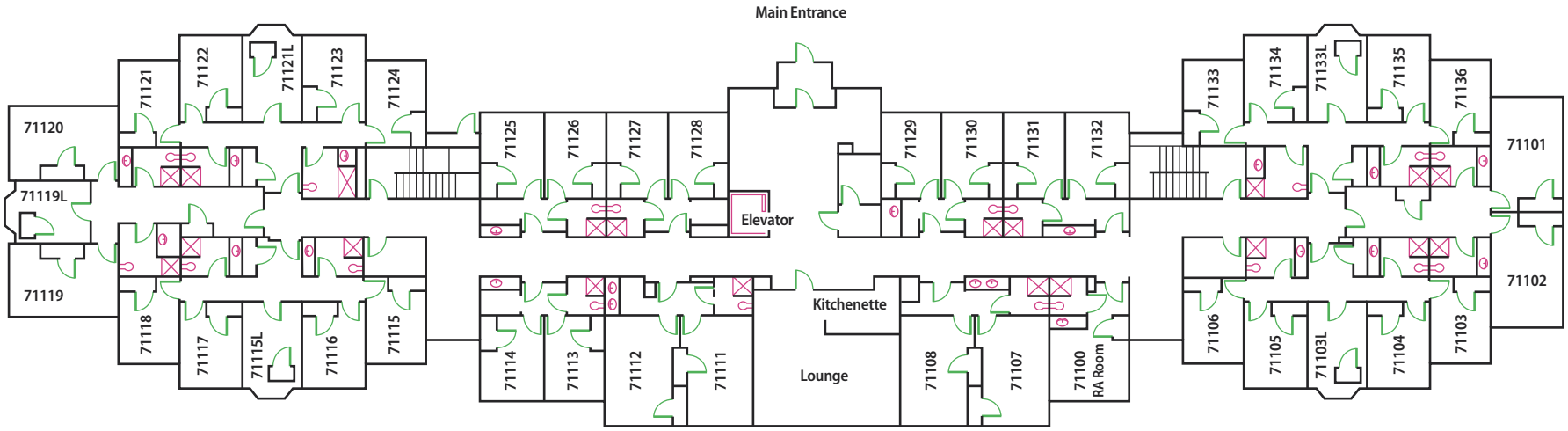

Housing & Residential Education
THE UNIVERSITY OF UTAH

*These floor plans are approximate only and may not reflect actual configurations.

N

SAGE POINT

Building 810

LEVEL 2

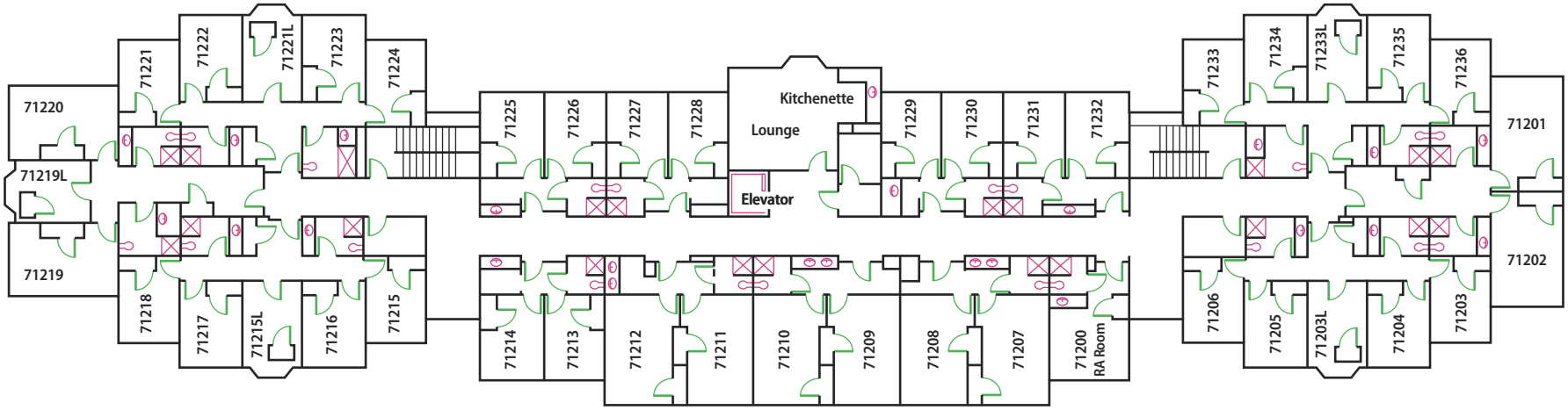

Housing & Residential Education
THE UNIVERSITY OF UTAH

*These floor plans are approximate only and may not reflect actual configurations.

N

SAGE POINT

Building 810

LEVEL 3

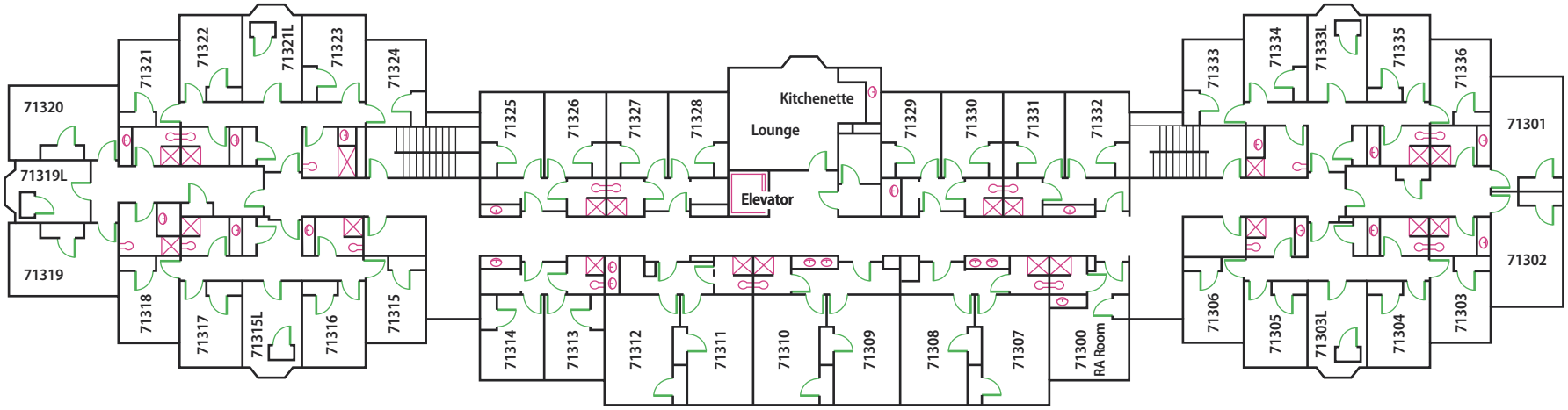

Housing & Residential Education
THE UNIVERSITY OF UTAH

*These floor plans are approximate only and may not reflect actual configurations.

N